Low Standby-Power Off-line PWM converters

General Description

The PN8218 consists of an integrated Pulse Width Modulator (PWM) controller and power MOSFET, specifically designed for a high performance off-line converter with minimal external components. PN8218 offers complete protection coverage with automatic self-recovery feature including Cycle-by-Cycle current limiting (adjustable OCP), and overload protection (OLP), over temperature protection(OTP), Over oltage Protection (OVP), CS Short-Circuit Protection and soft-start. Hi-mode, Eco-mode, Burst mode operation and device very low consumption helps to meet the standby energy saving regulations and achieve higher efficiency. Excellent EMI performance is achieved with frequency modulation. The device consists of the high voltage start-up circuit. The device provides an advanced platform well suited for the application of .The Six Levels of Energy Efficiency Standards, The Eur2.0, and The Energy Star.

Features

- Internal 650V avalanche-rugged power MOSFET
- Hi-mode（60kHz PWM）
- Eco-mode（PFM）
- Burst-mode （25kHz Burst-Mode）
- Frequency modulation for low EMI
- No-load consumption power <75 mW @230VAC
- Built-in Soft Start
- Internal HV Start-up Circuit
- Internal Slope and line input Compensation
- Open frame output power >24W @230VAC
- Excellent Protection Coverage:
  - ✧ Over Temperature Protection（OTP）
  - ✧ Over Load Protection（OLP）
  - ✧ Adjustable Over Current Protection（OCP）
  - ✧ Over oltage Protection (OVP)
  - ✧ CS Short-Circuit Protection

Applications

- Switch AC/DC Adaptor and Battery Charger
- Auxiliary Power for White Goods, PC,Audio
- LCD /PDP TV Power

Package/Order Information

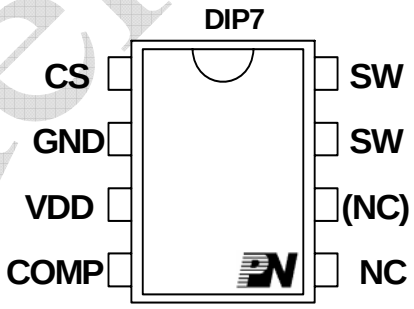

Order codes	Package
PN8218NSC-T1	DIP7

Typical Circuit

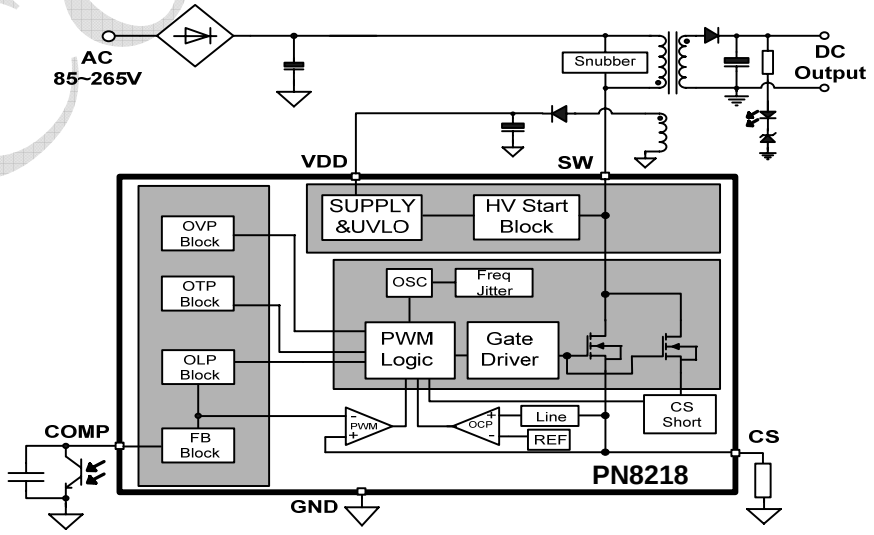

Confidential